Technical Approach Document

2KW Inverter

1) Introduction

This document contains a high level description of the concepts and innovations implemented in the Inverter design in order to achieve a power density of more than 132W/in^3 and very high efficiency.

2) Block diagram of the Inverter:

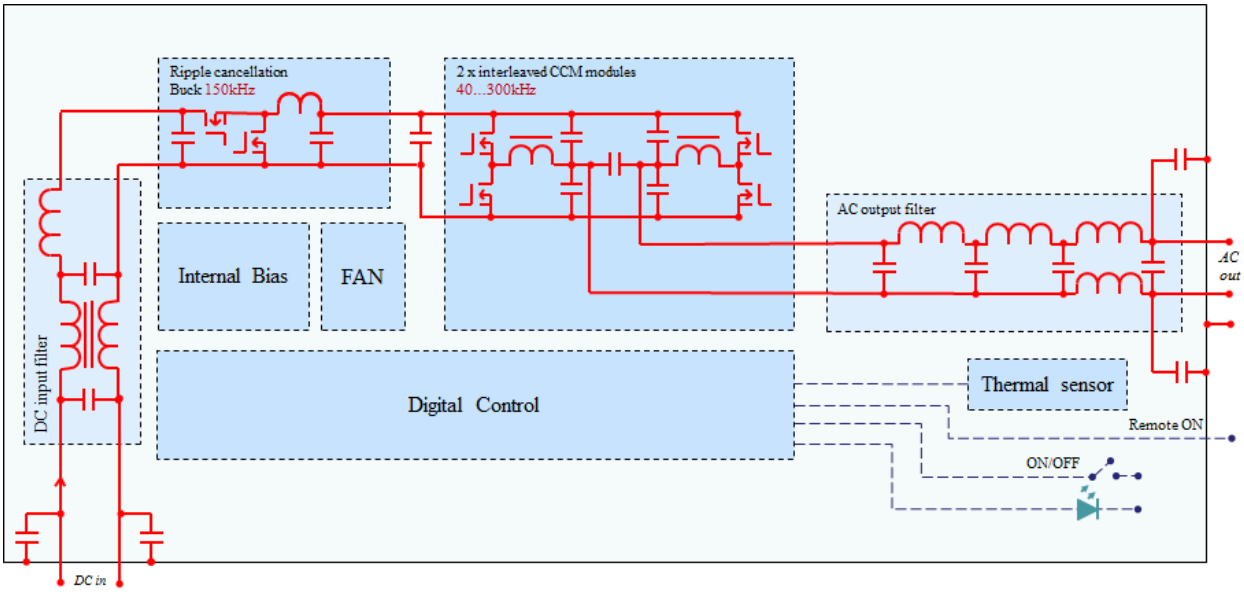

3) Solution implemented to reduce the 120Hz Voltage and Current ripple:

To minimize the volume of the filtering capacitors required to keep the input voltage and current ripple below the limits, an input Buck stage was implemented. This compact and very efficient module is used for dual purpose:

a) To reduce the low frequency ripple form the DC input and allow a higher voltage swing on the Internal Bulk capacitors.
b) To lower the internal bus voltage and allow usage of 450V rated Electrolytic capacitors for the Inverter stage.

4) Miniaturization of the DC – AC components:

The following solutions were implemented for this purpose:

a) High efficiency topology with minimum switching losses, by using Critical-Conduction Mode. The Zero-Voltage switching (ZVS) is achieved for all switches, at any load condition and for the complete AC sine wave. Having very low losses reduces the amount of power devices and heat sink surface needed for cooling.
b) High switching frequency design, with reduced magnetic components and smaller EMI filtering parts. This is achieved by using advanced GaN devices build in 8x8mm PQFN package.
c) Use latest generation of MLCC devices with high reliability against cracking and high ripple current capability to reduce the volume needed by the filtering capacitors.
d) Digital control to achieve very low THD and smooth switching waveforms (due to ZVS).

5) Thermal management:

To achieve very high power density and control the temperatures inside the unit we focused on the following aspects:

a) Keep the overall power loss at low level by:
    - Choosing the right topology with ZVS at any load condition. In this way the switching losses are reduced.

- Optimizing the magnetic components in terms of magnetic and copper losses.
- Choosing the right ferrite core material, with low losses at ambient temperature
- Using latest technology components, with low $R_{DS(ON)}$ and good thermal conductivity to the PCB and housing.

b) Use Multilayer PCB with thick-copper technology in order to achieve low impedance power interconnections and distribute the heat generated by the power devices inside the unit.
c) Design the unit with proper air paths so that the airflow produced by a small FAN can extract sufficient heat from the unit to achieve the specification regarding housing temperature.
d) Use thermal-conductive material with a controlled thickness, to cool power devices to the housing while at the same time avoid building hot-spots on the housing.

6) Electromagnetic Compliance (EMC):

Following solutions are implemented to minimize the volume occupied by the components for EMC compliance:

a) Use high frequency powertrain design, to reduce the volume of the Differential and CMM choke.
b) Minimize noise by using ZVS topology and smooth AC sine wave generated with digital control.
c) Use of high-permeability Nanocrystalline EMC Common Mode Choke Cores.
d) Reduce the volume occupied by capacitors by using high-reliability stacked MLCC capacitors, for AC output filter.
e) Proper designing the unit, to separate the quiet DC input and AC output areas from the noise produced by the powertrain.

Biographical Information appendix

- **Ionel "Dan" Jitaru** is the founder and President of Rompower Energy Systems Inc., an internationally recognized engineering firm in the field of power conversion. Mr. Jitaru has published 65 papers and held 45 professional seminars at different International Conferences in the power conversion field, wherein several of them have received the best paper award.

  Mr. Jitaru has pioneered several trends in power conversion technologies such as “Soft Switching”, “Full integrated multilayer PCB packaging”, “Synchronized rectification”, “Multi-cell Power Systems”. Some of these technologies have been covered by twenty-five granted patents and seventeen pending patents.

  Email address: Dan.Jitaru@rompower.com

- **Nicolae Daniel Bolohan,** R&D electrical engineer at Rompower, with more than 10 years’ experience in the field of power conversion, with expertise in high frequency powertrain designs from concept phase to mass production.

  Mr. Bolohan was involved in designing compact and high power-density products for automotive industry like on-board chargers and auxiliary DC-DC converters for EV and plug-in hybrid.

  Email address: Nicu.Bolohan@rompower.com